MICRO SWITCH
A DIVISION OF MINNEAPOLIS-HONEYWELL REGULATOR COMPANY
FREEPORT ILLINOIS
FED. MFR CODE 91929

SWITCH—TOGGLE FLUSH KEY

CATALOG LISTING
2TP12 SERIES
CHART 1

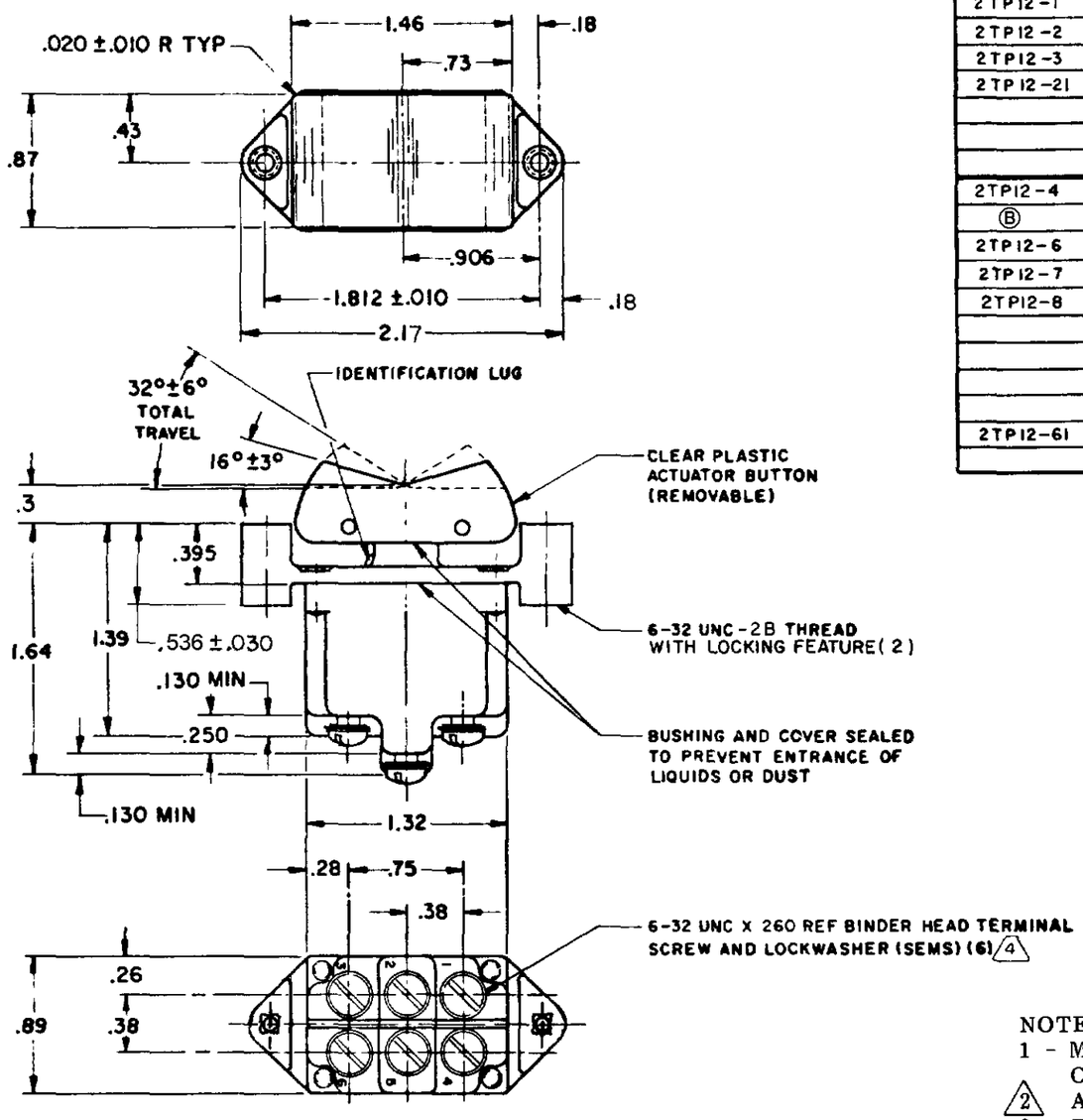

CAT. LIST.	2 CIRCUIT MADE WITH BUTTON DEPRESSED ON: OPPOSITE LUG (2-3, 5-6)	CENTER (1-2, 4-5)	LUG SIDE (1-2, 4-5)	
2TP12-1	ON	OFF	ON	L191 15A 125, 250, 277 VAC 1/2HP 125 VAC 1HP 250, 277 VAC 5A 125 VAC "L"
2TP12-2	ON	NONE	OFF	
2TP12-3	ON	NONE	ON	
2TP12-21	ON	OFF	NONE	
2TP12-4	ON	NONE	MOM OFF	L192 10A 125, 250, 277 VAC 1/4HP 125 VAC, 1/2HP 250, 277 VAC 3A 125 VAC "L"
(B)	ON	OFF	MOM ON	
2TP12-6	OFF	NONE	MOM ON	
2TP12-7	MOM ON	OFF	MOM ON	
2TP12-8	ON	NONE	MOM ON	
2TP12-61	NONE	OFF	MOM ON	

NOTES
1 - MICRO SWITCH CATALOG LISTING MARKED ON SIDE OF SWITCH
2 APPLIES ONLY TO "ON" AND "MOMENTARY ON" POSITIONS
3 - THESE SWITCHES WILL WITHSTAND TEMPERATURE OF 160°F
4 SCREWS FURNISHED UNASSEMBLED

THIS DRAWING COVERS A PROPRIETARY ITEM AND IS THE PROPERTY OF MICRO SWITCH A DIVISION OF MINNEAPOLIS-HONEYWELL REGULATOR CO. THIS DRAWING IS NOT TO BE COPIED OR USED WITHOUT THE APPROVAL OF MICRO SWITCH

CHARACTERISTICS	ELECTRICAL DATA	SCALE - FULL
	CONTACT ARRANGEMENT	DO NOT SCALE PRINT
		UNLESS OTHERWISE SPECIFIED DIMENSIONS ARE IN INCHES TOLERANCES ARE: ONE PLACE (0) ±.030; TWO PLACE (00) ±.015; THREE PLACE (000) ±.005; ANGLES ±°
		WEIGHT .14 LB EST

DRAWING NUMBER 2TP12 SERIES CHART 1 PAGE 1 OF 1
ISSUE M 17
RELEASE NO. SR 12719
REPLACES
REVISIONS
A CO-94413 J J A 8 OCT 99
B CO-95303 C S L 15 NOV 99
C 202714 C S L 3 APR 01
DRAWN H.B.W. 18 SEP 64
CHECK LSD 22 SEP 64
CHECK BRJ 22 SEP 64
CHECK 22 SEP 64
CHECK
RASTER
FO-50378 003