THIS DRAWING IS UNPUBLISHED. RELEASED FOR PUBLICATION -.- .
© COPYRIGHT 2005 BY TYCO ELECTRONICS CORPORATION. ALL RIGHTS RESERVED.

LOC	DIST
AD	47

REVISIONS

P	LTR	DESCRIPTION	DATE	DWN	APVD
	J	REV PER 0S12-0553-04	11-8-05	CJL	DRD

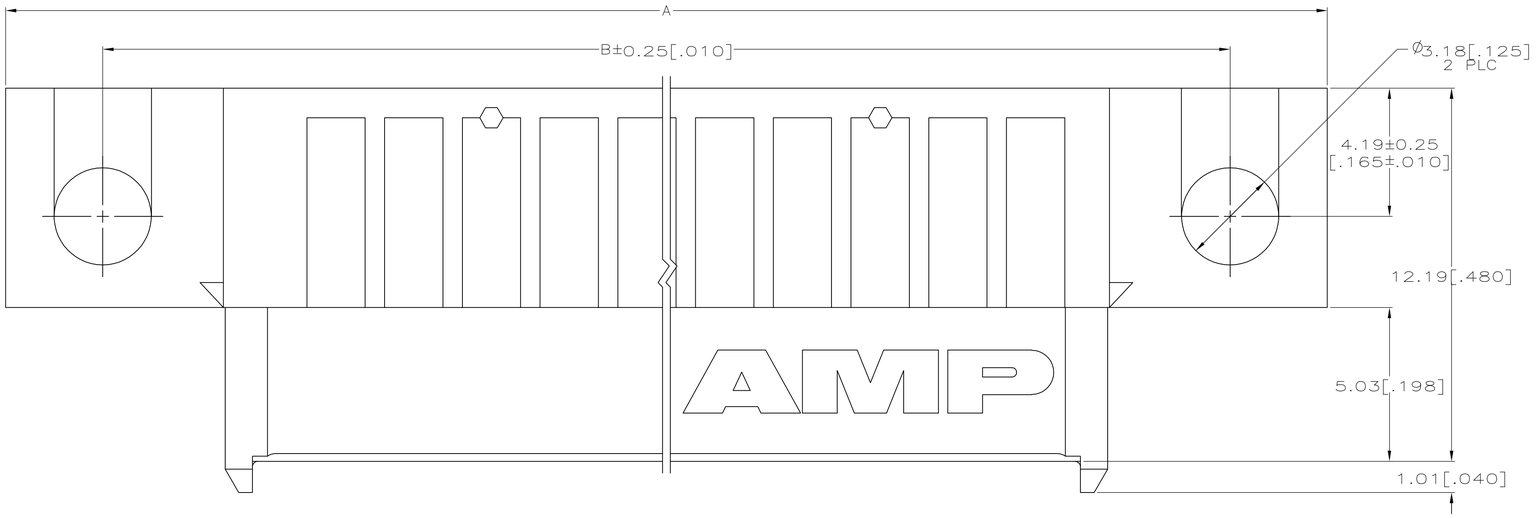

1. MOLDED PARTS: HIGH TEMPERATURE THERMOPLASTIC, COLOR NATURAL. RECEPTACLE CONTACTS: PHOSPHOR BRONZE. GROUND BUSSES: PHOSPHOR BRONZE.
2. RECEPTACLE CONTACTS: 0.00076[.000030] MIN GOLD IN CONTACT AREA, 0.00254–0.00762[.000100–.000300] TIN–LEAD ON SOLDER TAIL, ALL OVER 0.00127–0.00254[.000050–.000100] NICKEL ON ENTIRE CONTACT.
   GROUND BUSSES: 0.00076[.000030] MIN GOLD IN CONTACT AREA, 0.00254–0.00762[.000100–.000300] TIN–LEAD ON SOLDER TAIL, ALL OVER 0.00127–0.00254[.000050–.000100] NICKEL ON ENTIRE BUS.
3. ONE GROUND BUS WITH 4 TAILS PER EACH 20 RECEPTACLE CONTACTS.
4. ASSEMBLIES 140 POSITIONS OR SMALLER HAVE A ONE PIECE ORGANIZER. ASSEMBLIES 160 POSITIONS OR LARGER HAVE MULTIPLE ORGANIZERS OF 40 AND/OR 60 POSITIONS.

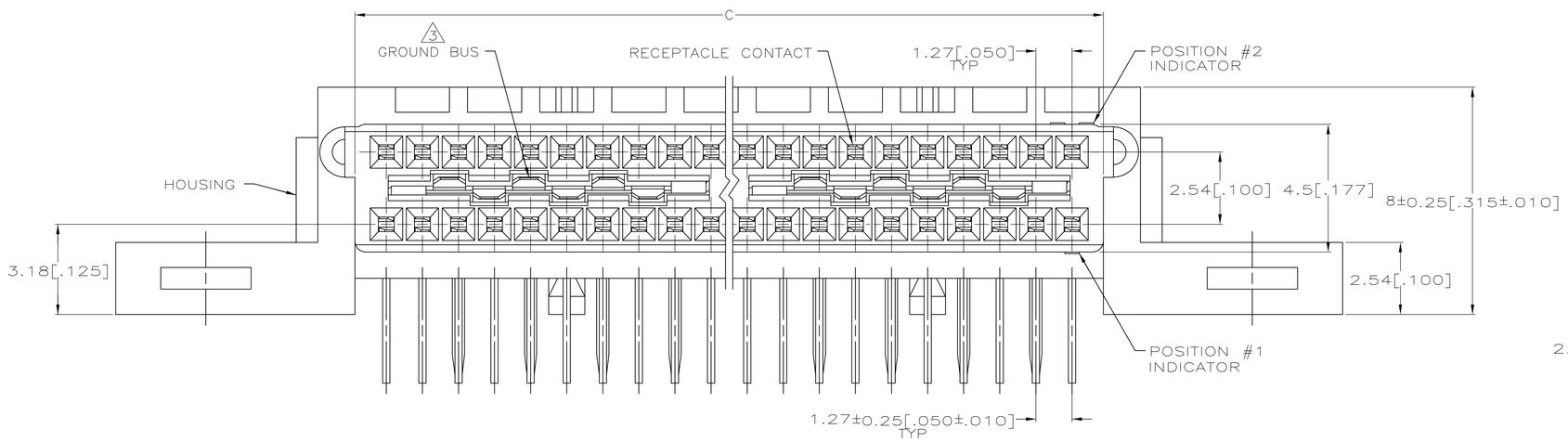

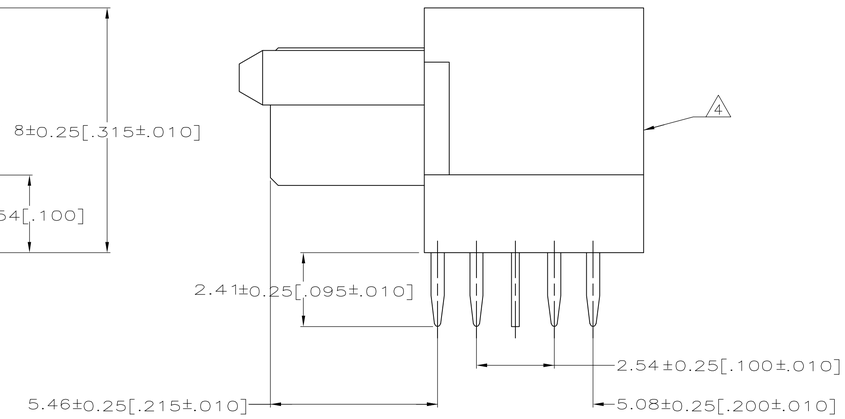

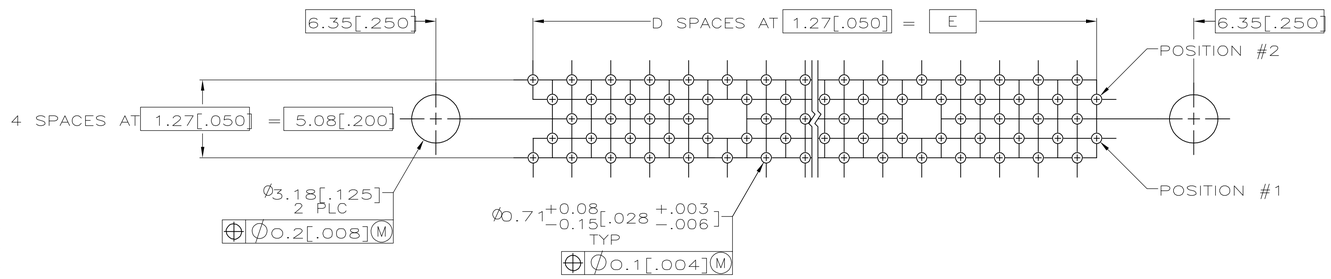

RECOMMENDED PC BOARD HOLE LAYOUT
(VIEWED FROM CONNECTOR SIDE)

	E	D	C	B	A	NO OF POS	PART NUMBER
OBSOLETE	151.13[5.950]	119	153.34[6.037]	163.83[6.450]	170.18[6.700]	240	1–536295–1
OBSOLETE	138.43[5.450]	109	140.64[5.537]	151.13[5.950]	157.48[6.200]	220	1–536295–0
OBSOLETE	125.73[4.950]	99	127.94[5.037]	138.43[5.450]	144.78[5.700]	200	536295–9
OBSOLETE	113.03[4.450]	89	115.24[4.537]	125.73[4.950]	132.08[5.200]	180	536295–8
	100.33[3.950]	79	102.54[4.037]	113.03[4.450]	119.38[4.700]	160	536295–7
OBSOLETE	87.63[3.450]	69	89.84[3.537]	100.33[3.950]	106.68[4.200]	140	536295–6
OBSOLETE	74.93[2.950]	59	77.14[3.037]	87.63[3.450]	93.98[3.700]	120	536295–5
	62.23[2.450]	49	64.44[2.537]	74.93[2.950]	81.28[3.200]	100	536295–4
	49.53[1.950]	39	51.74[2.037]	62.23[2.450]	68.58[2.700]	80	536295–3
OBSOLETE	36.83[1.450]	29	39.04[1.537]	49.53[1.950]	55.88[2.200]	60	536295–2
	24.13[.950]	19	26.34[1.037]	36.83[1.450]	43.18[1.700]	40	536295–1

THIS DRAWING IS A CONTROLLED DOCUMENT.

DIMENSIONS: mm [INCHES]

TOLERANCES UNLESS OTHERWISE SPECIFIED:
0 PLC ± –
1 PLC ± –
2 PLC ± –
3 PLC ± 0.13[.005]
4 PLC ± –
ANGLES ± –

MATERIAL 1 –
FINISH 2 –

DWN J.GERACE 11-30-92
CHK D.SINISI 11-30-92
APVD D.SINISI 11-30-92
PRODUCT SPEC 108-1272
APPLICATION SPEC –
WEIGHT –

tyco Electronics
Tyco Electronics Corporation
Harrisburg, PA 17105-3608

NAME
RECEPTACLE ASSEMBLY, RIGHT ANGLE, 2.41[.095] TAIL, BOARD TO BOARD, MICRO-STRIP

SIZE	CAGE CODE	DRAWING NO	RESTRICTED TO
A1	00779	C-536295	–

CUSTOMER DRAWING
SCALE 10:1 SHEET 1 OF 1 REV J